SERVICE MANUAL 2001

HOUSEHOLD PRODUCTS

12/12/2001

CONTEMPORARY BLENDER

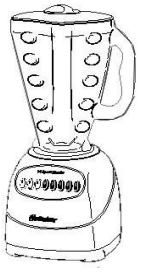

				2001		
		X	PART NO.			
6628		X				
6684			X			
BASIC PARTS	X					

120V., 500W., 60HZ.

KEY #	DESCRIPTION	PART #	QUANTITY REQ'D	1	2	3	4	5
2	SWITCH,8PB,1WH,7SL,	101797-001-000	1					
3**	WASHER,FLAT	029139-001-000	1					
4**	SCREW #4-24 X .430	084026-000-000	2					
5**	SLIDE SWITCH	083893-001-000	1					
6**	SCREW HEX WASHER #8	014344-010-000	1					
7	FIELD ASSY.	052492-902-000	1					
8	ARMATURE	027888-000-000	1					
9	BRACKET ASY-MOTOR	027878-000-000	1					
10	WASHER-PLS	026861-000-000	1					
11	MOUNT,MOTOR,CU/SLP,DROP	101205-000-000	1					
12	WASHER FLAT	017167-000-000	1					
13	COUPLING MACH	026921-001-000	1					
14	FAN-MTR,UNIV,JHNSN,3.28	100463-001-000	1					
15	NUT-SPECIAL-CRS	027629-000-000	1					
16**	SPRING BRUSH	023557-000-000	1					
17	COLLAR HEAVY	055036-001-085	4					
18	SLINGER,CRS	025729-002-000	1					
19	STUD-DRIVE,.468"	026247-000-000	1					
20**	CORD,HNKD-BLD,BK,CU&SP,1	002696-623-090	1					
21**	CAP-SWITCH,SILV	083855-001-820	1					
22**	ESCUTCHEON,CU,14SP,PU,EC	083907-002-000	1					
23**	BUMPER-BLACK BLDR,JCR FE	027477-000-000	4					
24**	SCREW,WSHR HD#10-16X3/4,	030602-003-000	4					
25**	SCREW-PAN HD,Ñ8-18,X 1/2	014342-035-000	3					
26	HSG,TOP,CUBE,,HTRSF,OS,BLK	101593-200-090	1					
27	HSG,BTM,CUBE,CL,450W,BLK	101594-000-090	1					
-	INSTR,BOOK,CU & SL,8-16S	069309-001-000	1					
	JAR PARTS							
1	JAR-GLASS,CUBE	084036-000-000	1					
2	COVER,JAR,CU,BK	083820-000-090	1					
3	CAP,FILLER	083819-000-089	1					
4	BTM-CONT,BLNK,PHENL,MEX	015132-020-090	1					
5	AGITATOR ASY,IC BLADE	031014-002-000	1					
6	RING,SEAL-LOW ZINC,.090	083422-040-000	1					

**** NOT SHOWN ON DRAWING**

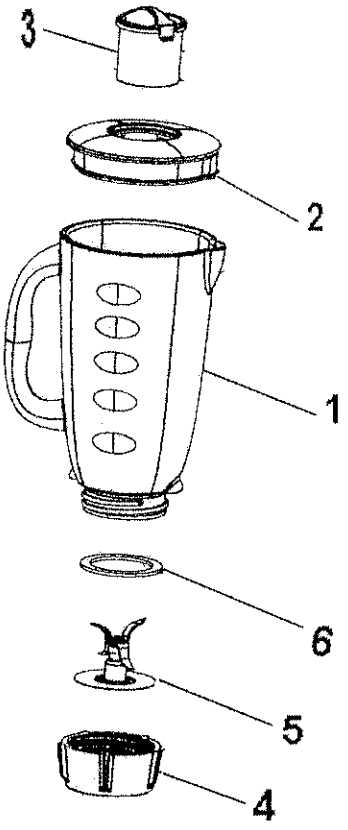

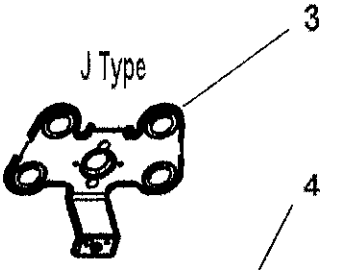

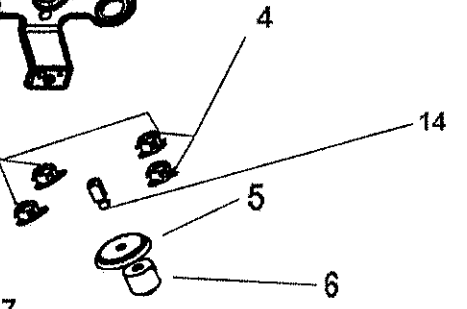

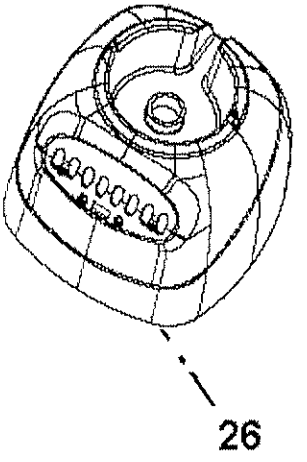

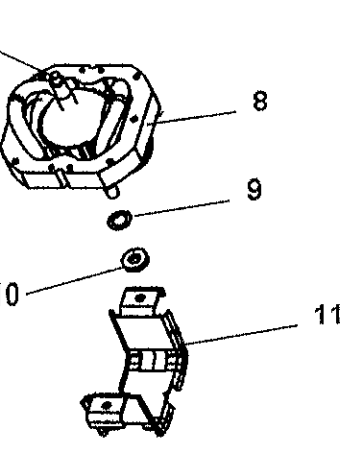
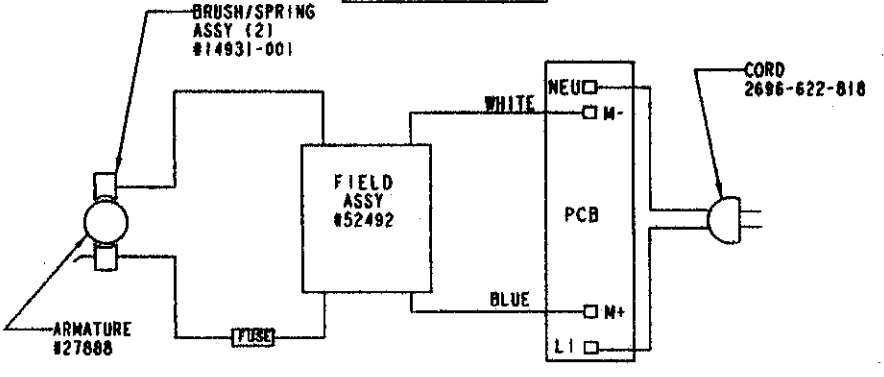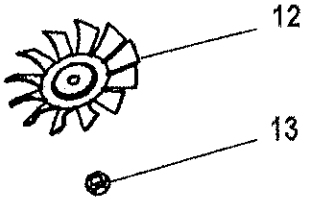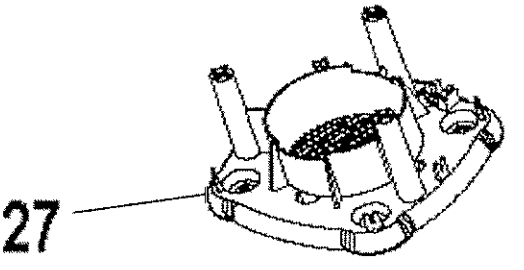
BLENDER	PCB ASSY
3 SPEED	52417
5 SPEED	52416